THIS DRAWING IS UNPUBLISHED. RELEASED FOR PUBLICATION -,- .
© COPYRIGHT - By - ALL RIGHTS RESERVED.

LOC	DIST
FT	0

REVISIONS

P	LTR	DESCRIPTION	DATE	DWN	APVD
	M1	REVISED PER ECO-11-004820	11MAR11	RK	HMR

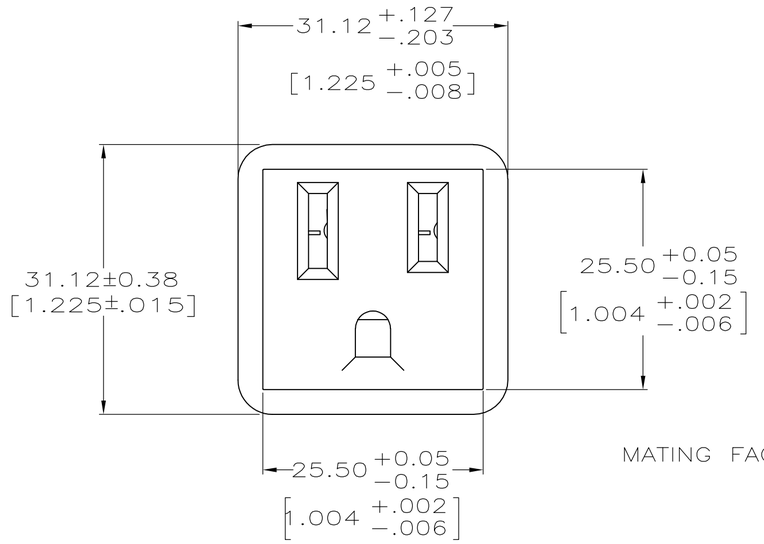

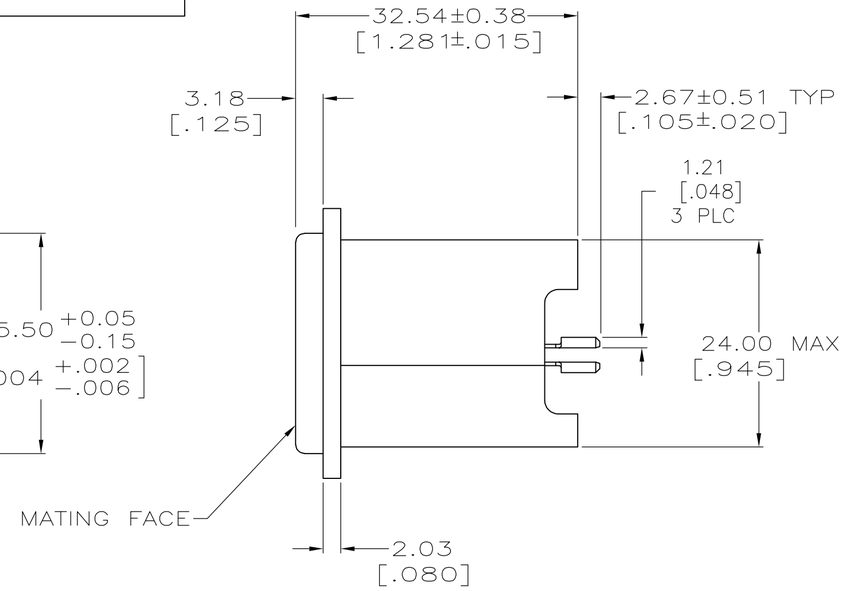

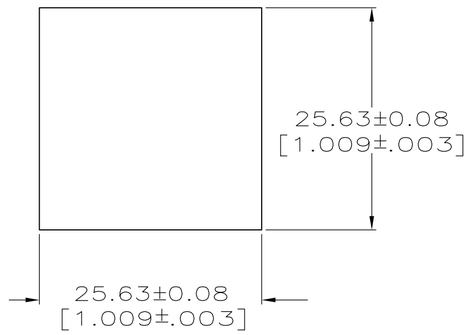

RECOMMENDED PANEL CUTOUT

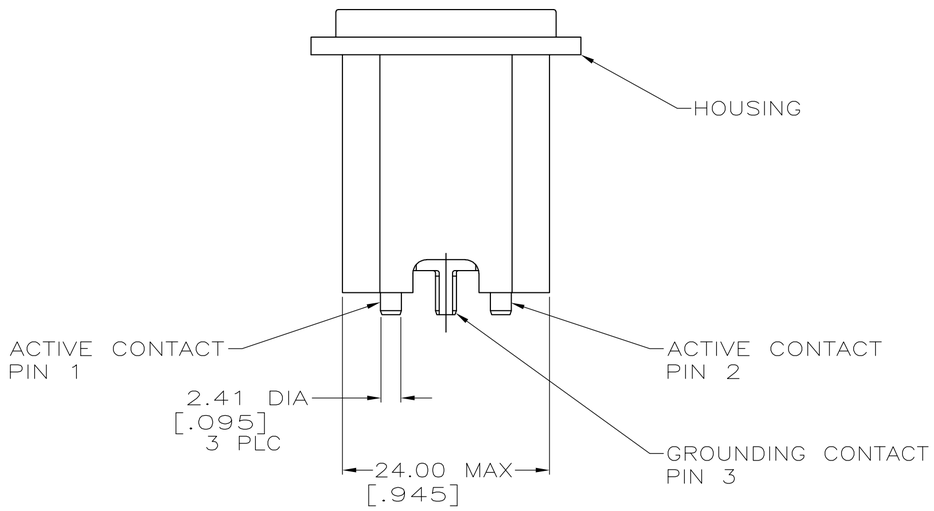

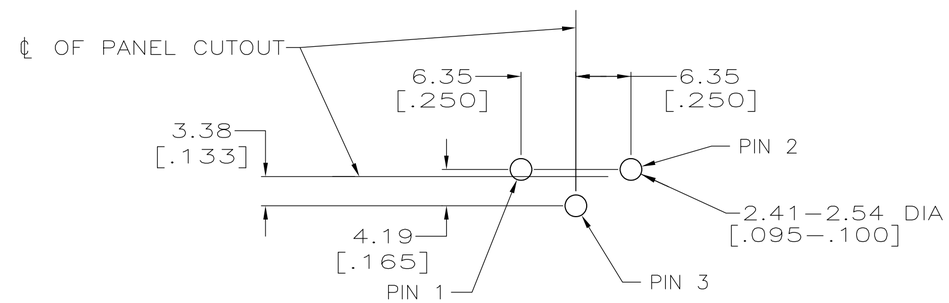

RECOMMENDED HOLE PATTERN
1.57[.062] THICK PC BOARD
COMPONENT SIDE

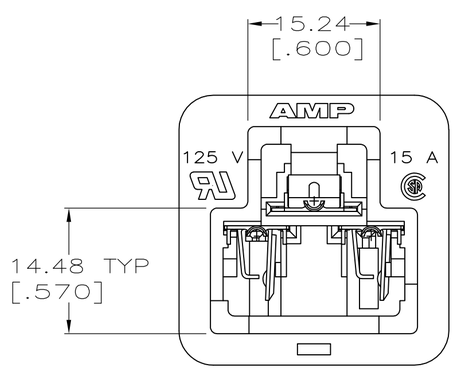

1. 2.54um[.000100] MIN TIN-LEAD FOR A MIN LENGTH OF .195 ON END OPPOSITE MATING FACE, OVER 1.27um[.000050] MIN NICKEL ON ENTIRE CONTACT.
2. 2.54um[.000100] MIN TIN FOR A MIN LENGTH OF .195 ON END OPPOSITE MATING FACE, OVER 1.27 MIN NICKEL ON ENTIRE CONTACT.
3. HOUSING: NYLON, COLOR: SEE TABLE. CONTACTS: BRASS

	COLOR	PART NO
2	WHITE	3-213598-4
2	BLACK	3-213598-2
2	GRAY	3-213598-1
1	WHITE	213598-4
1	BLACK	213598-2
1	GRAY	213598-1

THIS DRAWING IS A CONTROLLED DOCUMENT.

DIMENSIONS: mm [INCHES]

TOLERANCES UNLESS OTHERWISE SPECIFIED:
0 PLC ± -
1 PLC ± -
2 PLC ± 0.13[.005]
3 PLC ± -
4 PLC ± -
ANGLES ± -

MATERIAL 3
FINISH CONTACTS: 1

DWN K. WHITAKER 23JUNE2005
CHK D. BOSSI 23JUNE2005
APVD D. BOSSI 23JUNE2005
PRODUCT SPEC —
APPLICATION SPEC —
WEIGHT —

TE Connectivity

NAME RECEPTACLE ASSEMBLY, CONVENIENCE OUTLET —

SIZE	CAGE CODE	DRAWING NO	RESTRICTED TO
A2	00779	C-213598	—

CUSTOMER DRAWING | SCALE 2:1 | SHEET 1 OF 1 | REV M1

213598

Mouser Electronics

Authorized Distributor

Click to View Pricing, Inventory, Delivery & Lifecycle Information:

TE Connectivity:

3-213598-2